S3821 · S3822 · S3823

GRIP TIGHT™ PLUS CIRCUIT BREAKER LOCKOUTS

S3823 Lockout Device - Oversized Handle Circuit Breakers (480/600 V)

S3822 Lockout Device - Molded Case Circuit Breakers (480/600 V)

S3821 Lockout Device - Miniature Circuit Breakers (120/240 V)

ACHIEVE RELIABLE LOCKOUT IN EVEN MORE CIRCUIT BREAKER APPLICATIONS

THE GRIP TIGHT PLUS CIRCUIT BREAKER LOCKOUTS OFFER:

- **Dependability**
  Consistently attach to breakers and remain secure
- **Efficiency**
  Compatible with wide variety of circuit breaker handle shapes and sizes
- **Ease of Use**
  Lightweight, one-piece designs that require no tools for installation

Fold Down Cleat
Provides enhanced switch throw blocking when needed

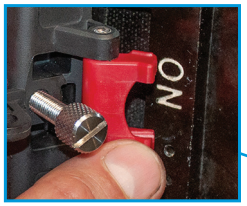

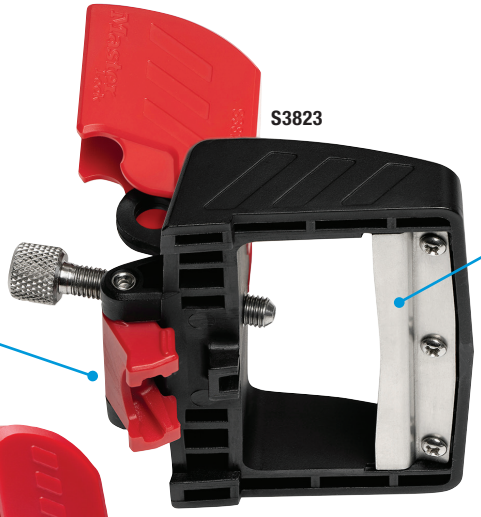

S3823

Curved Blade
Ensures two-point contact with the switch handle for greater hold

Large Thumbscrew
Knurled texture enables gripping with gloves, offering easy tightening for a secure lockout. Slotted to allow optional screwdriver adjustment

S3821

Fixed Cleat
Provides added physical blocking to prevent switch from turning to "on" position

S3822

Toothed Jaw
Delivers a tight hold on the circuit breaker handle

S3821 • S3822 • S3823
GRIP TIGHT™ PLUS CIRCUIT BREAKER LOCKOUTS

SIMPLIFY CIRCUIT BREAKER LOCKOUT WITH THESE INTUITIVE AND EFFECTIVE DEVICES

Take the guesswork out of circuit breaker lockout with these three devices. The Grip Tight Plus family features similar designs for consistent installation, while each is intended for specific breaker styles.

S3821 Lockout Device - Miniature Circuit Breakers (120/240 V)

- Compact size allows for locking out adjacent breakers
- Suitable for locking out multi-pole breakers and works with tie-bar toggles

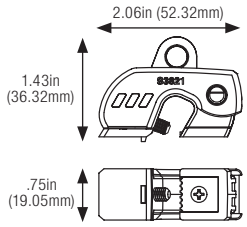

S3822 Lockout Device - Molded Case Circuit Breakers (480/600 V)

- Permanently fixed cleat adds physical blocking capability

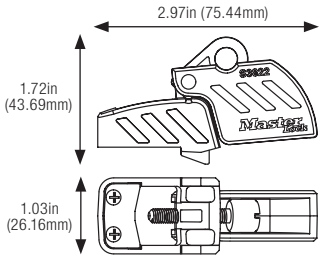

S3823 Lockout Device - Oversized Handle Circuit Breakers (480/600 V)

- Fold-down cleat provides enhanced switch throw blocking when needed

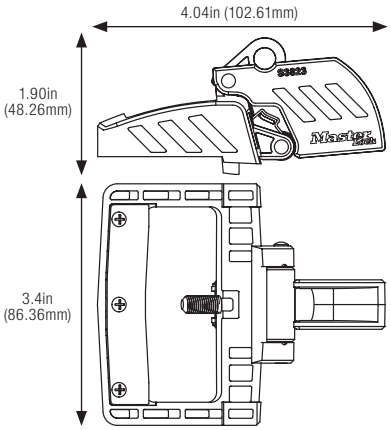

Features and Materials

Key	Component	Model(s)	Material
A	Thumbscrew	S3821, S3822, S3823	Stainless Steel
B	Lockout Body	S3821, S3822, S3823	Black Nylon
C	Lockout Cover	S3821, S3822, S3823	Red PC/ABS Thermoplastic
D	Toothed Jaw	S3821	Stainless Steel
E	Blade	S3821, S3822	Stainless Steel
F	Cleat	S3823	Red PC/ABS Thermoplastic

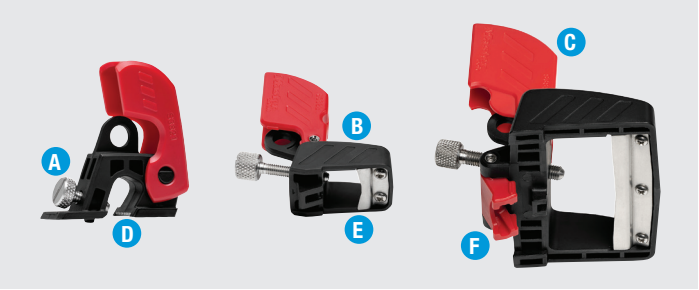

masterlock.com/new-safety-products/circuit-breaker-lockouts

w w w . m a s t e r l o c k s a f e t y . c o m
w w w . m a s t e r l o c k . c o m

Master Lock Company LLC, Milwaukee, WI 53154 U.S.A. | 800-308-9244
Master Lock Canada, Mississauga, Ontario L5L 5Z9 Canada | 800-227-9599

© 2019 Master Lock Company LLC | All Rights Reserved | Patents Pending

7000-0627 MO 7.5M Printed in the USA 08/19